THIS DRAWING IS UNPUBLISHED. RELEASED FOR PUBLICATION -
© COPYRIGHT copyright_date BY TYCO ELECTRONICS CORPORATION. ALL RIGHTS RESERVED.

LOC	DIST	REVISIONS				
P	LTR	DESCRIPTION	DATE	DWN	APVD
	A2	Released as per ECR-07-030422	17.12.07	SP	TS

PN 2-6 &
1-6(Integral bolt)

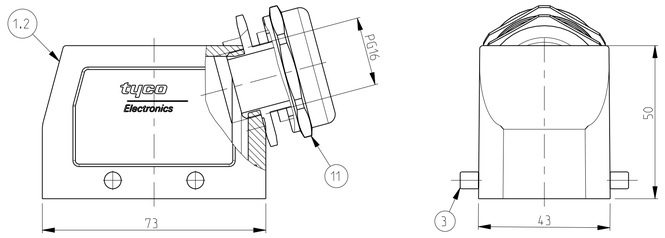

PN 2-7

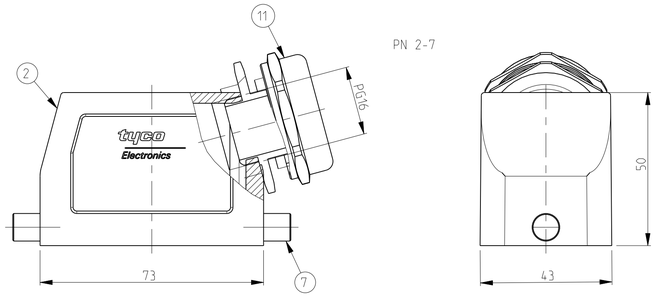

PN 1-1 & 2-1

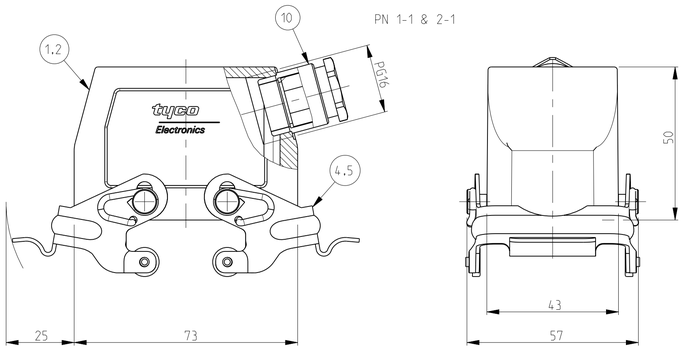

PN 1-3

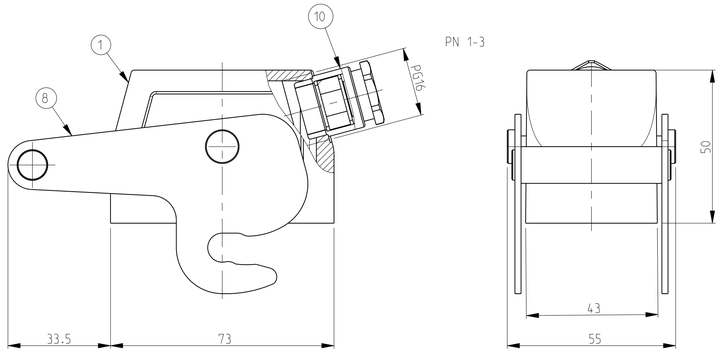

PN 1-7

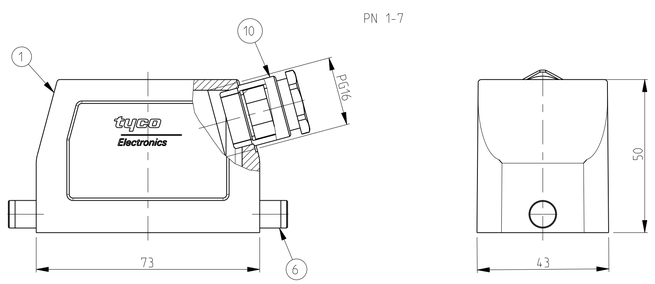

PN 2-3

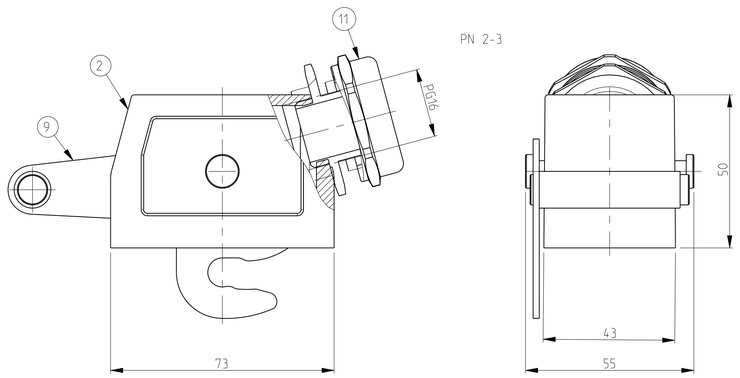

NOTES.

1 Material:Housing:Aluminium Diecasting Alloy

2 Surface-Powder Varnish Grey
-Aluminium Oxide +
Varnish Black

3 Varnish on the inside not necessary

4 Packaging
Quantity 5 Pieces in a box

PN 2-7

SCALE 1:2

PN 1-3

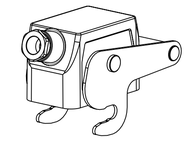

SCALE 1:2

PN 2-3

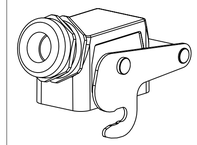

SCALE 1:2

PN 2-6 &
1-6(Integral bolt)

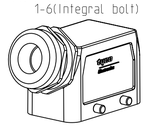

SCALE 1:2

PN 1-1 & 2-1

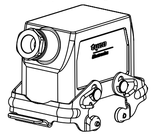

SCALE 1:2

PN 1-7

SCALE 1:2

2-3	1-3	2-7	1-7	2-1	1-1	2-6	1-6	DESCRIPTION	MATERIAL	SURFACE	COLOR	ITEM NO	REMARKS
1		1		1		1		Gland fitting	Brass	Nickel plated	Blue	11	PG16
	1		1		1		1	Cable connection round	Brass	Nickel plated	Blue	10	PG16
1								ZB Central clip	Stainless steel	Blank	-	9	
	1							ZB Central clip	Steel	Zinc plated	Blue	8	
		2						LB-Clip bolt	Stainless steel	Blank	-	7	
			2					LB-Clip bolt	Steel	Zinc plated	Blue	6	
				2				VS-Side clip	Stainless steel	Blank	-	5	
					2			VS-Side clip	Steel	Zinc plated	Blue	4	
						4		VS-Clip bolt	Stainless steel	Blank	-	3	
1		1		1		1		HB-K Hood	Aluminium	Aluminium oxide	Black	2	
	1		1		1		1	HB Hood	Aluminium	-	Grey	1	

DESCRIPTION
HB.10.STS.1.16
HB-K.10.STS.1.16
HB.10.STS-VS.1.16
HB-K.10.STS-VS.1.16
HB10.STS-GR.1.16
HB-K.10.STS-GR.1.16
HB-Z.10.STS-ZB.1.16
HB-K/Z.10.STS-ZB.1.16

THIS DRAWING IS A CONTROLLED DOCUMENT FOR TYCO ELECTRONICS CORPORATION. IT IS SUBJECT TO CHANGE AND THE CONTROLLING ENGINEERING ORGANIZATION SHOULD BE CONTACTED FOR THE LATEST REVISION.

DIMENSIONS: mm

TOLERANCES UNLESS OTHERWISE SPECIFIED:
0 PLC ±
1 PLC ±
2 PLC ±
3 PLC ±
4 PLC ±
ANGLES ±

MATERIAL -

FINISH -

DWN Schneider 05.12.02
CHK Schweiger 05.12.02
APVD -
PRODUCT SPEC -
APPLICATION SPEC -
WEIGHT -

Tyco Electronics
Tyco Electronics.AMP.GmbH
D-53819.Neunkirchen.Germany

NAME
Hood
HB.10.STS.1.16

SIZE A1 | CAGE CODE 00779 | DRAWING NO C-1102259 | RESTRICTED TO

CUSTOMER DRAWING | SCALE 1:1 | SHEET 1 OF 1 | REV A2

AMP 4805 REV 31MAR2000

Pro/ENGINEER DRAWING